Enertech Group

CTC EcoHeat 300

The Next Generation of Ground Source Heat Pump

EcoHeat 300 is the new generation of ground source heat pump, which has achieved our highest performance COP 5.04.

The touch screen has clear symbols with English text that makes it easy to adjust the heating and hot water or to retrieve information about the system operation. Included in this control package is an integrated internet or mobile network that allows you monitor and control your heating remotely

The EcoHeat 300 has a number of new components and controls including our newly developed refrigerant circuit, highly efficient compressor and variable flow control which incorporates a speed-control low-energy pump

The compressor and refrigeration components are now sealed in a separate, sound-insulated unit. This provides a dramatic reduction in the sound output. The compressor unit can be easily removed for easy installation and speedy maintenance. The Collector circuit can be easily connected to the right, left or on the back of the heat pump using the supplied flexible hoses.

A new engineering design enables us to increase the heat pump hot water production. This solution gives the user, legionella protection for hot water production and a higher capacity DHW with lower storage volume. This innovative solution produces hot water as and when it is used.

Energy Flex gives you the freedom to include other energy sources such as solar heating or biomass. You can even control your pool heating.

At CTC, we have chosen a proprietary technology that provides much more even heat without temperature swinging up and down. Radiators and underfloor heating will always get the right temperature thanks to temperature control mixing valve.

Wireless room sensors are available as an exceptionally wise accessory.

Key benefits:

- Record mode: 5.04 in COP (efficiency)
- Up to 80% lower heating costs
- Meets BBR rules
- Color touch
- With Energy Flex - total flexibility to connect to other heat sources With Energy Flex - total flexibility to connect to other heat sources

For more information about CTC's product range visit:
www.ctc-uk.com

Measurements of EcoHeat 300

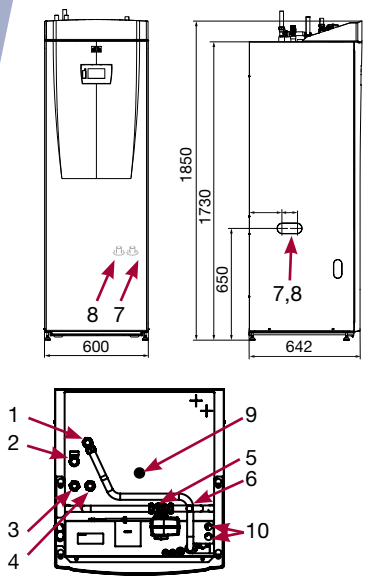

1. Expansion connection clamping ring 22
2. Connecting waste pipe clamping ring 22
3. Cold water connection Ø22
4. Hot water Ø22
5. Radiator Supply clamping ring 22
6. Radiator Return Ø22
7. From rock / ground Ø28 (right, left and rear) As a rock / ground Ø28 (right, left and rear)
8. Lift sleeve Rp 3 / 4 ”
9. Connection of external systems(tube penetrations)

Scope of supply:

Heat pump connection solution of cold side Brine-level vessel comes with:

- Room sensor
- Flow sensor
- Outdoor sensor
- Installation and Maintenance Instructions
- Safety valve for the water consumption, 9 bars
- Safety valve for the cold side, 3 bar
- Cable tie 2pcs
- Support sleeves 3
- Compression fittings 2
- 3 x current sensors

Accessories:

Installation Kit 1 (Expansion vessel 18 l, angular coupling, circulation pump, thermostatic mixing valve, filling coupling brine 520-G25)

Installation kit 2 (Expansion vessel 18 l, angular coupling, circulation pump, thermostatic mixing valve, filling coupling brine 520-G32)

Expansion vessel G20 18 L, angular coupling, gasket

Pump Stratos 25/1-8 Para

Pump Stratos Para 25/1-12

Replenishment Lead a G25

Replenishment Lead 2 G32

Flow monitor Internet Monitoring SMS Control Wireless room sensors

Technical data	EcoHeat 306	EcoHeat 308	EcoHeat 310	EcoHeat 312
Dimensions W x H x D	600 x 1850 x 642 mm			
Electrical data	400V 3N~			
Rated output power	11,7 kW	12,6 kW	13,4 kW	14,1 kW
Tillsatsel (adjustable)	0,3-9 kW			
Power consumption at the compressor 35/50°C	1,3/1,7 kW	1,8/2,3 kW	2,0/2,5 kW	2,5/3,4 kW
Emitted output compressor at 0/35 [1)]	6,05 kW	8,37 kW	10,18 kW	12,05 kW
COP, enl EN255 [1)]	5,00	5,01	5,04	5,04
Emitted output compressor at 0/35 and 0/45 [2)]	5,9/5,5 kW	8,2/7,9 kW	10,0/9,6 kW	11,7/11,2 kW
COP, enl EN14511 [2)]	4,57/3,54	4,58/3,64	4,60/3,68	4,60/3,66
Max op. current	4 A	5,2 A	6,8 A	8,2 A
Min group fuse when installing. of 3, 6, 9 kW electric	10, 16, 20 A	16, 16, 20 A	16, 20, 25 A	16, 20, 25 A
Water volume boiler (PS)	223 l			
Maximum operating pressure boiler (PS)	2,5 bar			
Water volume hot water loop	5,7 l			
Max operating pressure hot water coil	10 bar			
Brine pump speed setting	3			
Brinesystem min/max temp (TS)	-15/30 °C			
Brinesystem min/max pressure (PS)	0,2/3 bar			
Refrigerant Amount (R407C)	2,1 kg	2,1 kg	2,1 kg	2,5 kg
Breaking value high pressure	31 bar			
weight	245 kg	255 kg	255 kg	265 kg
Required threshold	1925 mm			

The product meets EN-Directives:

LVD: 73/23/EEC and 93/68 EEC EMC: 89/336/EEC and are tested according to EN255

1) Heat medium 35 ° C, t = 10 K, brine 0 ° C plus heat carrier and the Brine pump

2) Heat medium 35/45 ° C, t = 5 K, brine 0 ° C incl. heat carrier and the Brine pump

+44 (0) 1905 791 610
www.ctc-uk.com
Po Box 1, Vines Lane, Droitwich Spa, Worcestershire, WR9 8NA

Enertech Group

170 055 39. 11-03. Subject to alterations in design.