Enertech Group

CTC V40 Lambda

Lambda controlled wood gasification boiler

The CTC V40 Lambda wood boilers have been developed in accordance with the latest industrial standards. The boiler is attractively designed incorporating innovative features for ease of operation.

The CTC V40 Lambda is controlled by intelligent software through a user friendly control panel. The unit also has the facility to provide heating control for up to four heating circuits.

The thermal bed and the Vortex concept of the combustion chamber result in very low emissions. Thanks to the excellent heat transmission within the boiler the lambda unit achieves a boiler efficiency of 92%.

The spacious 138 litre fuel chamber is fitted with side panels which both optimise primary air distribution and tar reduction; as well as facilitating downward movement of the logs.

Cleaning of the boiler tubes is easily accomplished by movement of a lever which can be optionally mounted on either the left or right hand side of the boiler. The integral ash collector is easy to access to allow simple cleaning.

The unit boiler must always be installed and operated with a buffer tank system which has been sized according to the UK building regulations.

The combustion control of the CTC V40 Lambda is controlled by a Lambda sensor. It automatically governs the primary and secondary air damper motors.

Key features:

- Highly efficient
- Very low emissions.
- Powerful suction draught fan.
- “Hotcover“ fuel chamber side panels.
- Ceramic combustion chamber with Vortex concept.
- Easy cleaning of boiler tubes (heat exchanger).
- Optional handing of front doors.
- Attractive streamlined design with flush door handles.
- Intuitive, user friendly control panel.
- Lambda sensor control
  – higher efficiency and efficient combustion

For more information about CTC’s product range visit:
www.ctc-uk.com

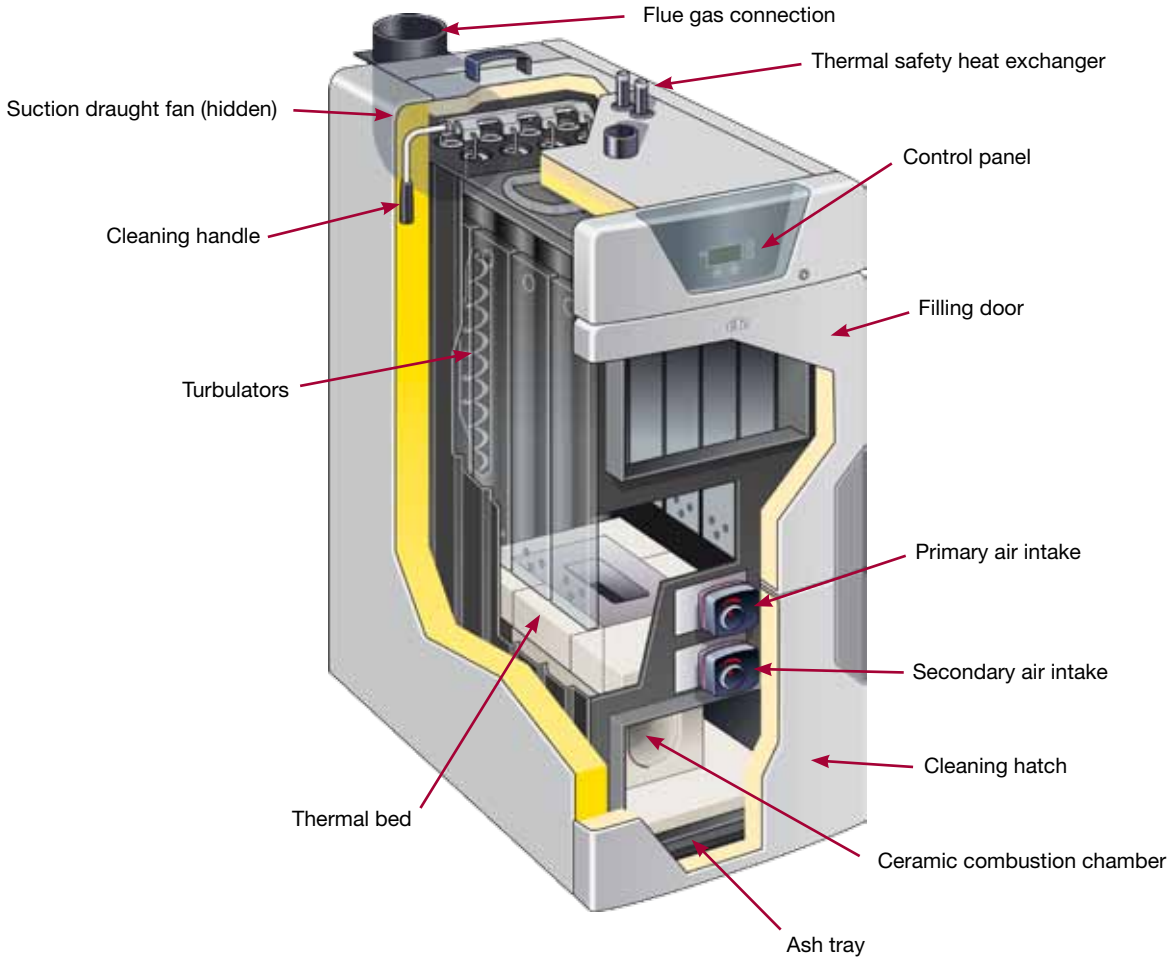

Technical data CTC V40 Lambda			
Rated output	40 kW	Max. working pressure	3 bar
Boiler efficiency	92 %	Min. chimney draught	0,15 mbar
Fuel chamber volume	138 l	Chimney diameter	150 mm (125-200)
Fuel chamber depth	549 mm	Recommended buffer volume	2000-3000 l
Max. length wood logs	500 mm	Control system	Boiler-control
Weight	470 kg		/Comfort-control
Water content	105 l		2+2 circuits

1. Heating flow G 1 ¼''
2. Heating return (charging group) G 1 ¼''
3. Heating return (charging pump) G 1 ¼''
4. Connection heat exchanger ø 22 mm
5. Draining G ½''
6. Flue gas connection ø 150 mm outside
7. Sleeve ¾" thermal valve

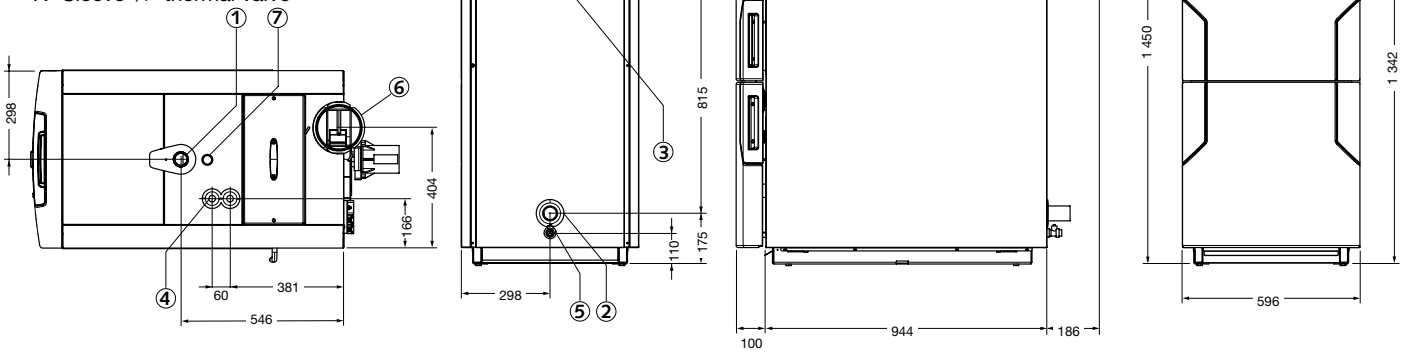

+44 (0) 1905 791 610
www.ctc-uk.com
Po Box 1, Vines Lane, Droitwich Spa, Worcestershire, WR9 8NA

Enertech Group

170 055 44. 11-01. Subject to alterations in design.